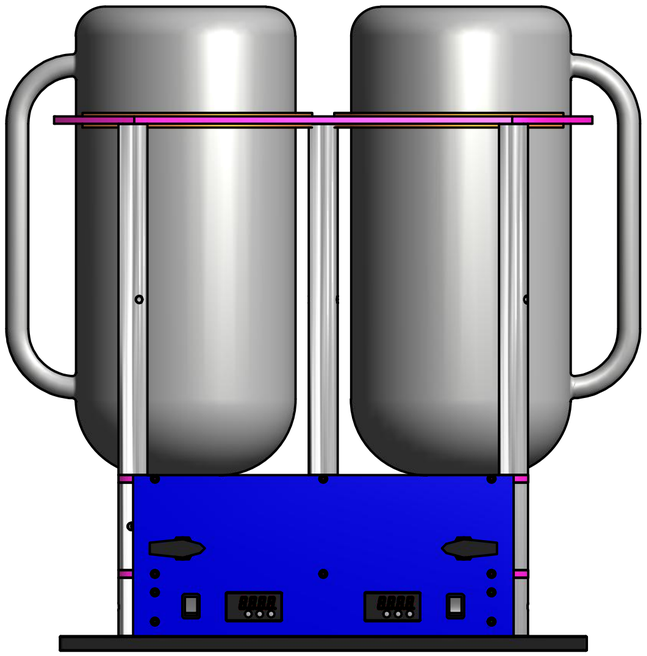

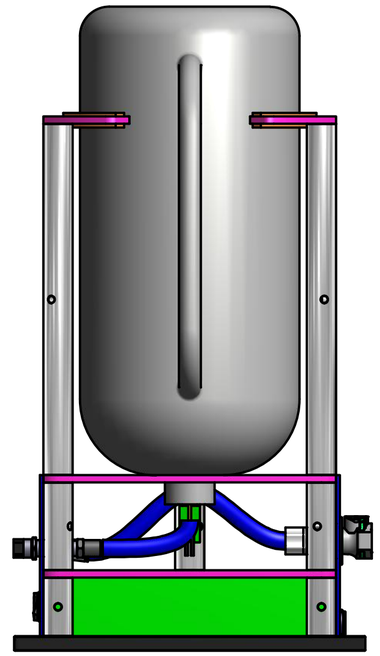

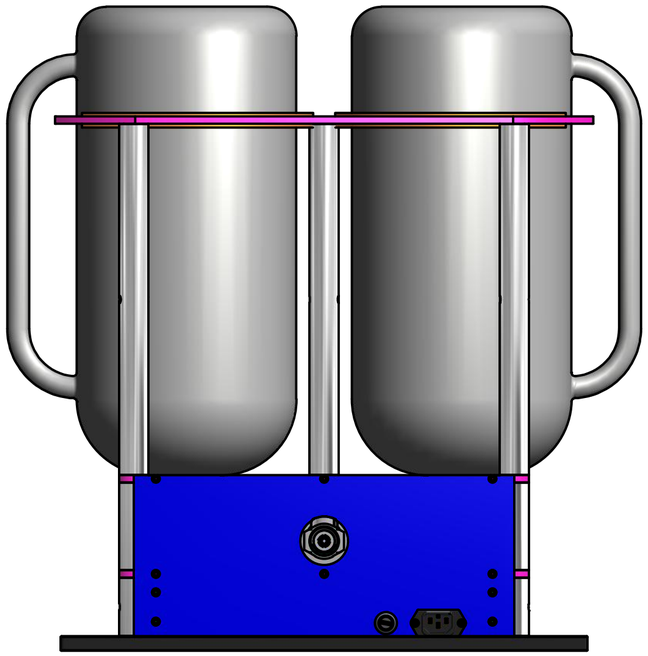

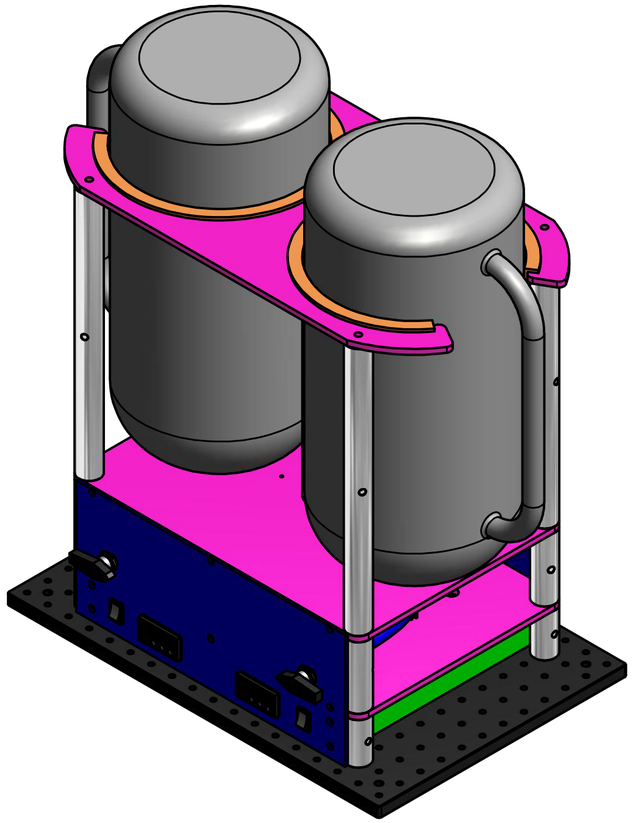

Notes:
1. Fastening parts are not shown

NOTICE:
INFORMATION CONTAINED IN THIS DOCUMENT OR ANY REPRODUCTION THEREOF, IS PROPRIETARY INFORMATION AND PROPERTY OF HOWARD HUGHES MEDICAL INSTITUTE. IT SHALL NOT BE DISCLOSED, COPIED, DUPLICATED OR USED FOR MANUFACTURE, PRODUCTION OR PROCUREMENT, WITHOUT THE EXPRESS WRITTEN PERMISSION OF HOWARD HUGHES MEDICAL INSTITUTE.

(UNLESS SPECIFIED OTHERWISE)
PRIMARY UNITS: INCHES
[SECONDARY UNITS]: MILLIMETERS

PRIMARY TOLERANCES:	
X.X	± 0.020
X.XX	± 0.010
X.XXX	± 0.005
X.XXXX	± 0.0005
ANGULAR	± 0.5 DEG

- DO NOT SCALE DRAWING -

THIRD ANGLE PROJECTION:

HHMI
HOWARD HUGHES MEDICAL INSTITUTE

HHMI janelia farm research campus

DewarDryer.iam

SIZE	PART NUMBER	REV	SHEET
C	DewarDryer2		1 OF 2

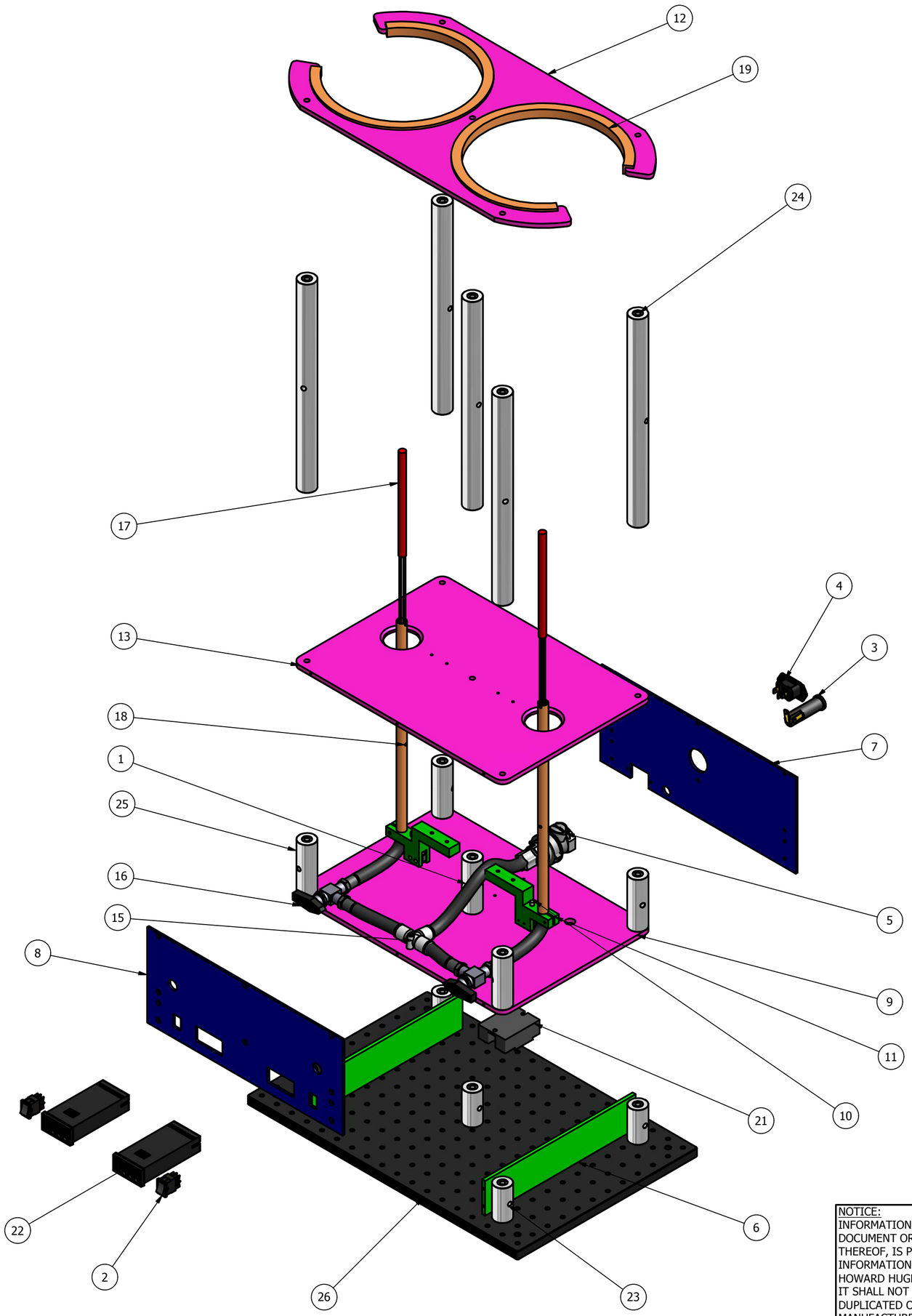

PARTS LIST			
ITEM	DESCRIPTION	VENDOR	QTY
1	PVC tube 3/8" OD		
2	Rocked switch		2
3	Fuse holder		1
4	Power jack		1
5	Coupling Body, Panel Mount, 3/8" OD Tube	Colder	1
6	Side Panel	HHMI: JFRC - ID&F	2
7	Back Panel	HHMI: JFRC - ID&F	1
8	Front Panel	HHMI: JFRC - ID&F	1
9	Controller Plate	HHMI: JFRC - ID&F	1
10	Button	HHMI: JFRC - ID&F	2
11	Heater holder	HHMI: JFRC - ID&F	2
12	Top Plate	HHMI: JFRC - ID&F	1
13	Heater plate	HHMI: JFRC - ID&F	1
14	Push-to-Connect Tube Fitting Adapter for 3/8" Tube OD X 1/4" NPT Male Pipe	McMaster	4
15	Push-to-Connect Fitting Tee for 3/8" Tube OD	McMaster	1
16	Panel-Mount Brass Ball Valve Elbow, 1/4" NPT Female	McMaster	2
17	Cartridge Heater High Temp, 3/8" Dia, 6", 120 VAC, 400W	McMaster	2
18	Stainless Steel Shape Type 304/304L, Round Tube, 1/2" OD	McMaster	2
19	U-channel silicone rubber profile 1/2" x 1/2"	McMaster	2
20	Subminiature Snap-Acting Switch (SPST-NO)	Mouser	2
21	Solid state relay	Omega	1
22	Temperature controller	Omega	2
23	Ø1" Pillar Post Extension, Length=2"	Thorlabs	5
24	Ø1" Pillar Post Extension, Length=12"	Thorlabs	5
25	Ø1" Pillar Post Extension, Length=3"	Thorlabs	5
26	Breadboard 12" x 18"	Thorlabs	1

Notes:
1. Fastening parts are not shown

NOTICE:
INFORMATION CONTAINED IN THIS DOCUMENT OR ANY REPRODUCTION THEREOF, IS PROPRIETARY INFORMATION AND PROPERTY OF HOWARD HUGHES MEDICAL INSTITUTE. IT SHALL NOT BE DISCLOSED, COPIED, DUPLICATED OR USED FOR MANUFACTURE, PRODUCTION OR PROCUREMENT, WITHOUT THE EXPRESS WRITTEN PERMISSION OF HOWARD HUGHES MEDICAL INSTITUTE.

(UNLESS SPECIFIED OTHERWISE)
PRIMARY UNITS: INCHES
[SECONDARY UNITS]: MILLIMETERS

PRIMARY TOLERANCES:	
X.X	± 0.020
X.XX	± 0.010
X.XXX	± 0.005
X.XXXX	± 0.0005
ANGULAR	± 0.5 DEG

- DO NOT SCALE DRAWING -
THIRD ANGLE PROJECTION:

HHMI
HOWARD HUGHES MEDICAL INSTITUTE
HHMI janelia farm research campus

DewarDryer.iam

SIZE	PART NUMBER	REV	SHEET
C	DewarDryer2		2 OF 2